Preface

FIELD BUS PROCESS CONTROL USER LAYER TECHNICAL REPORT

The Field Bus being developed simultaneously by ISA SP50 and IEC SC65C/WG6 is intended to be applied to time-critical applications in process control, distributed data acquisition and some areas of factory automation. While generally we planned to follow the "spirit and intent" of international data communications standards, our first priority is to these time-critical or real-time applications. Explicitly, we provided a standard to satisfy user needs.

This Technical Report defines the details of the field bus process control user layer for continuous and batch process control applications, as well as typical sequential and interlock control applications in the process industries. It is usable in other industries wherever similar applications exist. It establishes a data communications structure for implementing all types of field bus devices. This structure is required to achieve interoperability and interchangeability of field devices.

This paper includes the following sections:

BACKGROUND
FIELD BUS REQUIREMENTS
USER LAYER DEFINITION
DIFFERENCES BETWEEN DCS AND FIELD BUS
FUNCTION BLOCKS
ABOUT PROGRAMMABLE LOGIC CONTROLLERS
FIELD BUS DEVICES
USER LAYER CONCEPTS
OBSERVATIONS AND CONCLUSIONS

BACKGROUND:

The top layer of the ISO (International Standards Organization) OSI (Open Systems Interconnection) Reference Model (ISO 7498-1, 1987) is numbered seven (7), and is called the "Application Layer." Above this is generally called "the application." Therefore, the Application Layer provides communications services specific to the type of application using the open system. The ISO/OSI seven layer architecture, is intentionally vague about the definition of the contents of the Application Layer, while the functions of all lower six layers are well defined in the general data communications environment. The vagueness allows application needs to define the functions of the seventh layer.

In 1986, the MAP (Manufacturing Application Protocol) Steering Committee of the MAP Users' Group requested that the major applications of interest to manufacturing should prepare "companion standards" to support the core (general) work being done at ISO. This work supports all applications, and is called MMS, Manufacturing Messaging Service, ISO 9506. The major functions of MMS are as follows:

- Uploading and downloading
- Task (function) management
- Variable and data access (read, write)
- Semaphore management
- Event management
- Journal management
- File management
- Status and identification query
- Clock synchronization

The four companion standards are being (have been) prepared by the following organizations:

Process Control	ISA SP72
Robotics	Robotics Institute of America (RIA)
Programmable Logic Control	NEMA (National Electrical Manufacturer's Association)
Numerical Machine Control	EIA (Electronics Institute of America)

In 1985, the ISA approved the charter for the SP50 committee to develop a digital Field Bus. One of the primary directives for the Field Bus was to enable digital communications for instrumentation and control to the same level of interchange that has been achieved by analog (4-20 ma) transmission. After the first few meetings, it became obvious that digital and logical device communications were also necessary.

After review of MMS, ISA S72.02 and the other companion standards, ISA SP50, the Field Bus committee, decided that a fresh approach was required. Specifically, it was decided that the end users' needs must be considered in the definition of the application layer services. While the MMS services were probably good for low level (programmer) use of the Field Bus, more work was required to define a high level interface for the types of functions and services necessary to serve the distributed process control environment of the late 1990's.

FIELD BUS REQUIREMENTS:

The Field Bus committee began by developing a priority-ordered list of requirements that a Field Bus must satisfy. These requirements led to the definition of a two-level physical layer to satisfy both the needs of the following:

- o H1 slow speed traditional process control using existing wiring, meeting intrinsic safety requirements, and delivering field device power on the same wires, and

- o H2 high speed process and logical control using new wiring and, if possible, deliver power on the same wires and meet intrinsic safety requirements.

Many of the user requirements for Field Bus do not appear in the body of the standard, because they do not directly affect either the form or function. However, these user requirements do affect our understanding of the form and function of both the physical and user layers, and "why" the standard functions and features exist. Some of this information is contained in the first chapter of the appendix.

Many of the requirements were expressed in terms of process control functionality, rather than reduced to "communications language." Very soon, the Applications Layer subcommittee split into two organizations:

- o Applications Layer Subcommittee -- to define the OSI Application Layer (7) functions required to support user functions, and

- o User Layer Subcommittee -- to define the user needs.

In order to define the actual needs of users, it was determined that a model of the user layer software was required complete with its functionality and algorithmic behavior. From this model, the services that would be needed to support such software that corresponds to the "application" noted in the OSI model could be defined. This procedure differs from the procedures used in other communications standards which assume the "application" is only a generic systems programming environment. The functionality and real-time data structures developed for the user layer model require extensive services from the application layer.

Just what is the user layer model? We have attempted to project from today's smart transmitter environment, to the next level of smartness for field devices. It was clear in 1987, that one or more vendors would move the final closed loop control calculation to a field device; a transmitter or a valve positioner. We didn't expect these products so soon, but they are already for sale and were exhibited at the 1990 ISA Conference and Exhibit.

PROTOCOL MODEL

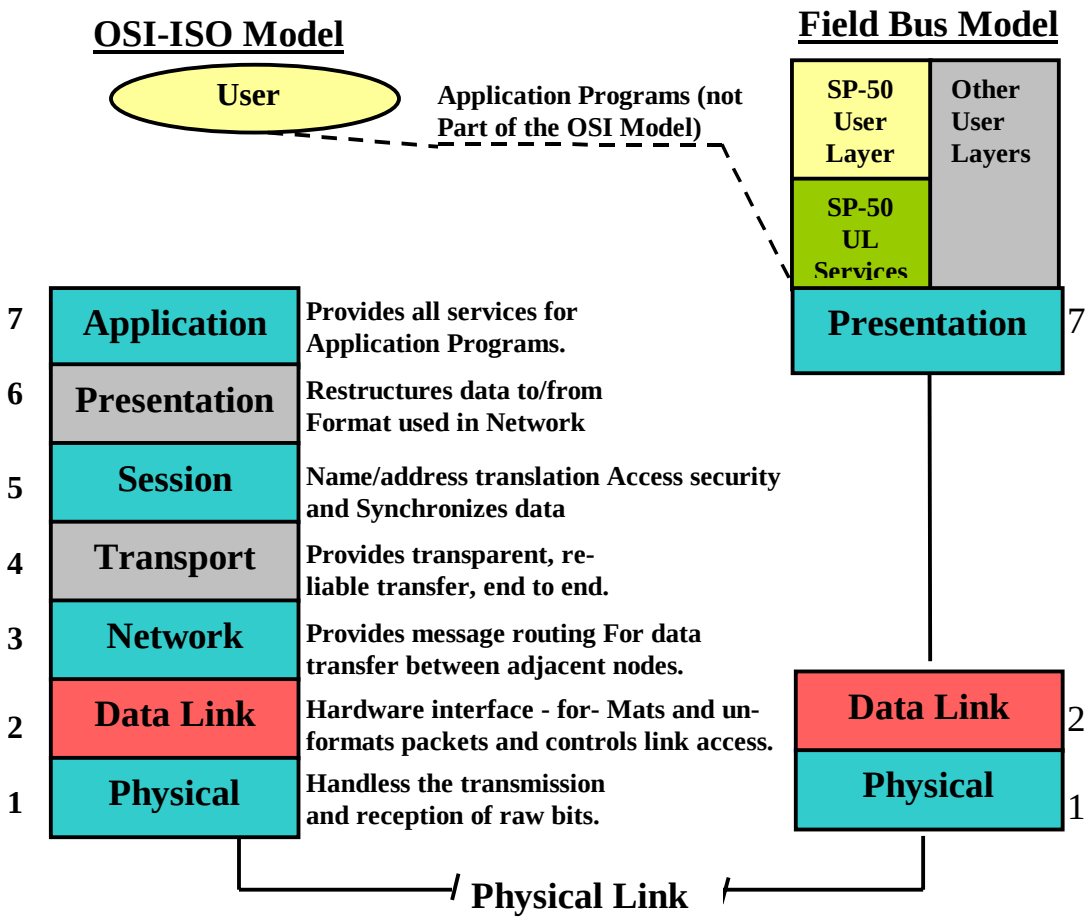

Figure 1: Preface, Figure 1, Protocol Models

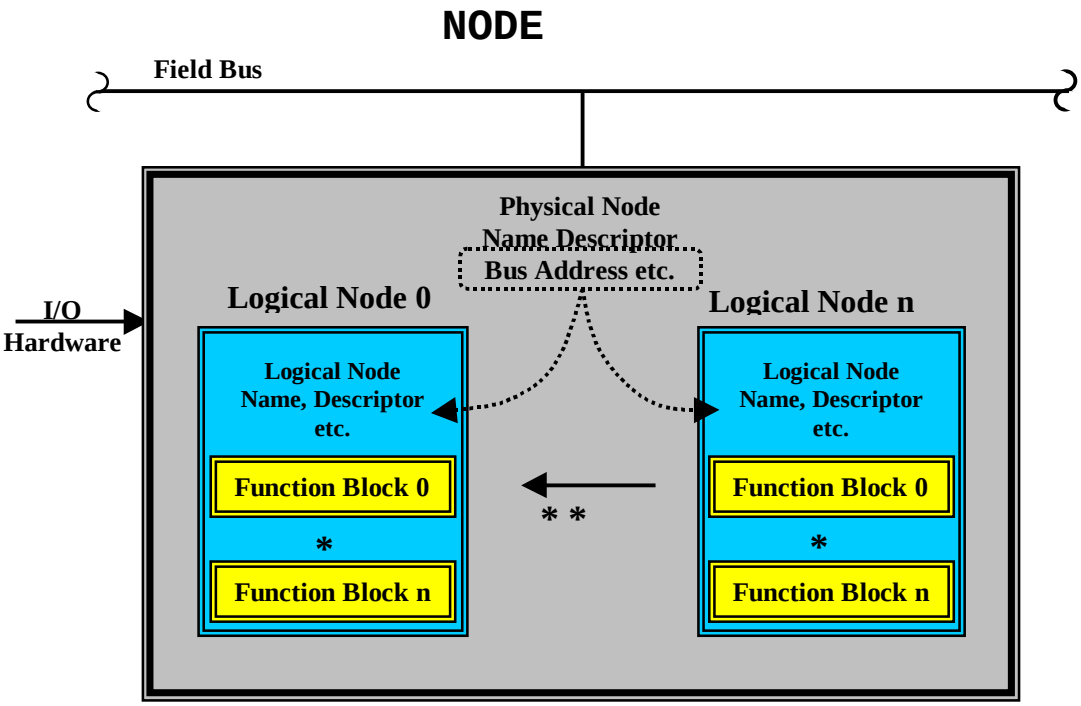

Figure 2: Node

So far these products still depend upon the use of either Proprietary or limited availability bus technology working together with 4-20 ma transmission, however, their control parameters are available on those vendors' systems products for remote tuning and control mode selection.

The ISA Field Bus User Layer is oriented about the process control problem assuming a complete distribution of the scan and control functions all within Field Bus devices. The capability is provided for measurement, control calculation and final actuation in the same or separate nodes on the Field Bus, as necessary. Rather than taking a generalized message passing structure, the User Layer has used a complete distributed object-oriented approach modeled after several existing distributed control systems (DCS) and programmable logic controllers (PLC) in common use. The choice of this model was very pragmatic -- the DCS architecture has evolved from centralized computer control with increasing distribution of functions and has been field proven to work. A model constructed using only message passing without a semantic message structure would require the invention of an unproven mechanism. The committee has chosen to adapt its semantic model from those in common use. In addition, the architecture for communicating with PLC's has been included in this same model. Methods used to configure or program DCS's and PLC's are not in the scope of this model.

USER LAYER DEFINITION:

How can the User Layer semantic model be described? In other words, what syntactical format can be used to express the process control semantic model? We have settled upon a two level procedure to describe the Field Bus User Layer as follows:

1. A description of the User Layer Machine; a description of the implementation of the User Layer on a hypothetical high level language computer base.

2. A document abstracting the User Layer Machine into a set of equivalent requirements which contain all of the critical elements of the referenced machine, but without the specific design content.

The first document is called the "User Layer Technical Report." It was written by a committee interested in preserving the design of distributed control systems (DCS) which have proven to be useful and sufficient for a wide variety of time-critical applications in data acquisition and process control. The format of the document is that of a software design specification or an implementation description, simply because it was easier for the committee to write. It reads similar to system descriptions of distributed control systems since this is the primary source material within the experience of the committee. Since considerable criticism has been offered about the "over-specification" of the Technical Report, the subcommittee has decided to prepare a separate standard document.

The second document is the true standard for the User Layer. It is written in "requirements language", but without an implied implementation. Where the method(s) of implementation are important to achieve the objectives of the standard, they are explicitly stated. This is the document which will be submitted for ISA (and eventually IEC) approval, but it will be incomplete without the Technical Report which provides examples and much of the rationale. The technical content of both documents are intended to be identical. The Technical Report will always be updated to reflect the current status of the standard for the User Layer.

DIFFERENCES BETWEEN DCS AND FIELD BUS:

The Field Bus Process Control User Layer provides an application environment not unlike that of a distributed control system (DCS). The intent was not to

replace the DCS, but to define the architecture necessary for a DCS to communicate with smart field devices when control actions occur in those devices. There are many differences between Field Bus User Layer functions and those typically performed by a DCS.

It has always been expected that the Field Bus would remove the functions of process variable processing from the DCS. Similarly, processing of outputs to proportioning process control valves and other actuator mechanisms is also included. DCS's operating with Field Bus devices will acquire process variables in engineering units form. Likewise they will send a desired valve output as a percentage.

Inclusion of control objects within Field Bus devices changes DCS functionality more substantially. We expect that many smaller systems will not require the traditional DCS at all, but will only require DCS-like operator console(s). Larger systems, which will require a DCS, will use it to provide the upper level cascade controls and feedforward controls. While Field Bus User Layer provides some capability to build complex cascades and feedforward loops, these are intended to provide the backup to more complex loops built in the DCS.

In all cases, we attempted to keep the Field Bus simple. For example, there is no "ramp and soak" algorithm, because the committee felt that any algorithm we could design would be inadequate to fulfill the needs of true batch control. Yet, we decided to provide simple setpoint ramping, determining that this time-critical function was best administered at the Field Bus level. Only one PID algorithm was chosen, to keep it simple. Our guideline was always to include the time-critical items at the User Layer, but to eliminate the supervisory and high level calculation functions.

FUNCTION BLOCKS:

The architectural base of Field Bus is the function block, which performs the work of data acquisition, control and output. Every function block contains an algorithm, a formula or rule, and a data base that is used by the algorithm. The parts of the data base that are permitted to be accessed through communications are called "attributes" or parameters. Each function block has a user-defined name, called a block tag, which must be unique. Function block data is addressed over field bus via TAG.PARAMETER.

The User Layer Standard defines a "function block" to be a process- related data structure with a "data part" and a "rule part", as described in the following illustration:

```
      Function Block Type
        A class of user elements consisting of
             (1) The definition of a data structure partitioned into
                 input, output, and internal variables, (data part,
                       also called "data base") AND
             (2) A set of operations to be performed upon the variables
                     of the data structure when the element is invoked (rule
                     part, also called "algorithm").
      Function Block
        An identifiable and distinct instance of a function block type.
```

There are four classes of function blocks as follows:

- o Standard -- the attributes and the algorithm are fully defined within the standard such that both the dynamic and static performance are known. Both the algorithm and data base may be extended as long as the standard function remains.

- o Alternative -- the attributes include those of a standard block, but the algorithm may not provide the same static or dynamic performance as the corresponding standard block.

- o Generic -- the attributes are defined only in generic terms such

that any system may access them through the use of these attributes. The algorithm is not defined by the standard

- o Open -- the attributes and the algorithm are not defined within the standard.

The intent of the function block structure is to allow devices to be delivered with pre-defined algorithms requiring only the data base to be downloaded for configuration into a specific control application. These are the Standard and Alternative blocks. A vendor may also deliver a Generic or a unique Open block complete with the algorithms pre-defined. In contrast, a vendor may also provide a start-up procedure, outside of the User Layer, to download algorithms to any type of function block, although this model is intended for use only with Generic and Open blocks.

Standard function blocks, which have been included, also provide interchangeability for the functions they define. The standard function block definitions allow extensions (i.e., functionality and parameters beyond those defined in the standard) and alternate function blocks (which use a different algorithm but the same parameters as a standard block). Extensions and alternate blocks, of course, may not be interchangeable. Generic and open function blocks accommodate both vendor-proprietary functionality and new field-device functions which are not practical to implement using combinations of standard function blocks. These classes of function blocks are not intended to be interchangeable. However, extensions and function blocks of any class which follow the user layer requirements for standard blocks, will be interoperable via field bus. The user layer also includes features of extended tag addressing and auto-formatting, which facilitate interoperability of extensions and "non-standard" blocks.

The following diagram shows the equivalency between "function blocks and conventional process and instrumentation diagrams (P&ID's):

Figure 3: Diagram: Function Blocks / P&ID

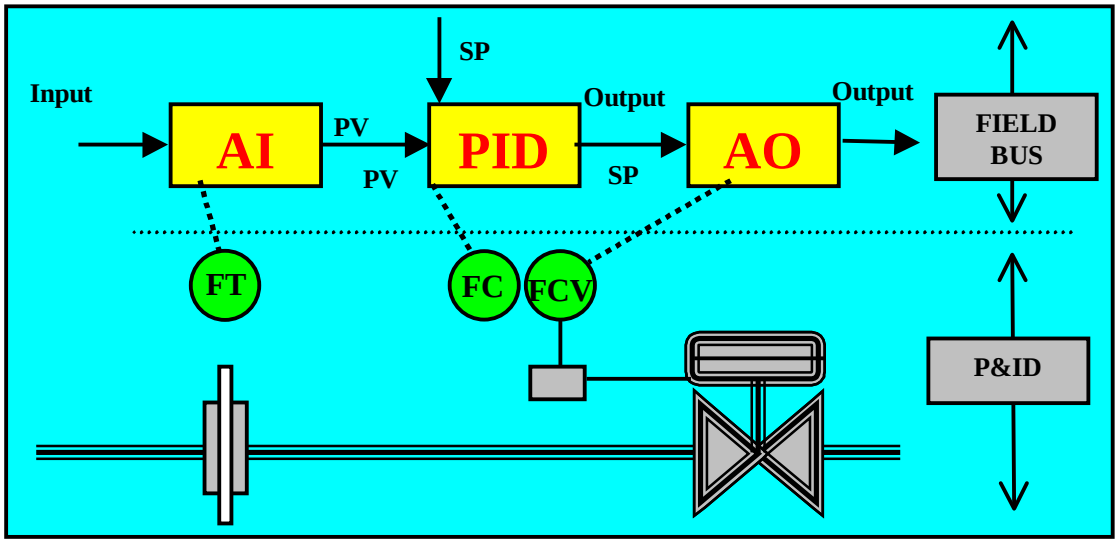

ABOUT PROGRAMMABLE LOGIC CONTROLLERS:

In the past five years, programmable logic controllers (PLC's) have become indispensable elements of all classes of process control systems. They are used to implement safety interlocks in continuous control and as the primary sequencer in batch control. Their low cost, flexibility and high energy I/O are as specialized for these applications, as the multifunction controllers of DCS's are for regulatory control of continuous processes. Therefore, the User Layer provides a rudimentary capability to communicate with PLC's modeled on the

available PLC interface techniques already in use. The PLC interface capability does not reflect the needs which might be developed in a User Layer for factory automation or machine control.

FIELD BUS DEVICES:

The Field Bus will allow many different types of devices to be logically interconnected on a single communications link. The following is a partial list of the types of devices that are anticipated:

- Sensors and transmitters
- Valve, damper and other position actuators
- Single and multipoint regulatory loop controllers
- Programmable logic controllers
- Dual and triple modular redundant regulatory and programmable logic controllers
- Safety shutdown systems
- Multipoint data acquisition systems, analog and digital
- Historical archiving devices
- Operator (human) interface workstations
- Chart recorders
- Dedicated indicators and displays
- Gateways to higher level communications networks
- Bridges to other Field Bus segments
- Temporarily connected devices
  - Hand-held human interface terminals
  - Communications link test devices
  -

At first, devices similar to present-day field devices, such as "smart" transmitters, positioners, single-loop controllers and indicators, and hand-held diagnostic devices will appear on field bus. In the future, new devices will appear that take full advantage of the capabilities of a standard digital field bus.

USER LAYER CONCEPTS:

The User Layer addresses a wide variety of real-time applications, but is designed specifically to support applications in closed loop process control. The control applications may be very simple arrangements of sensors, controllers, actuators and display devices all on the same Field Bus segment, or the devices can exist together in any combination. Any of the devices may also exist on a different Field Bus segment, however, it is understood that a performance or response time penalty may occur. We have also planned for the orderly connection of classical DCS or supervisory computer systems that are driven by a timing authority not under Field Bus control, yet provide essential target information.

All Field Bus devices are addressed at the User Layer by a tag name, rather than the low layer address necessary for the operation of the Data Link Layer. The translation of tag name to address is provided by the Application Layer based on User Layer definitions. The physical devices and function blocks all have unique tag names. This concept extends to initialization in which the physical device installed into the Field Bus can exist with only a unique tag name and expect that the data required to begin operation can be downloaded across the Field Bus identified only by that tag name. If a physical device contains only one logical node and only one function block (e.g. as in a single-measurement field transmitter), the device tag, node tag, and the block tag will be the same.

"Data ownership" is a primary concern of the process control user layer. It is essential from a user standpoint that there be one, and only one, location where all data for a given point exists. That location must be at the source of the data. Field devices will typically be the original source of information, and therefore the "data owner". All associated data resides in the field device, and not in a central controller, bridge, or gateway device. Each logical node or

"data owner" on field bus has a data dictionary which describes the data items "owned" by that node.

While the Data Link and Application Layers provide for a method of synchronous scheduling of function blocks, the User Layer provides its own method of scheduling centered on the time critical needs of control function blocks. Each control block reads the data it requires from a limited number of locations, and writes its output after completing its calculation. The time cycle of a control block is fixed by its configuration (data base), but the User Layer provides for an orderly recovery of missed cycles based on the process control model.

The functions defined for the field bus user layer support simple field sensors and actuators. The user layer function blocks provide for the essential interchangeability of simple field sensors and actuators, and at the same time enable manufacturers to establish product differentiation through functional enhancements. The function blocks defined in the field bus user layer also anticipate the development and use of field bus control devices. They provide a means to integrate "continuous" control, "analog" monitoring, and "discrete" status monitoring and logic control in the same system. The user layer function blocks provide a means of interoperability for presently-defined and future control devices from different manufacturers.

OBSERVATIONS AND CONCLUSIONS:

The Field Bus Application and User Layers are now emerging into a model for communications standards that has not previously been achieved. The transition from today's diverse process control architectures to a Field Bus architecture well integrated with a DCS will not be done overnight. We believe this change will be gradual over the next five to seven years, not because of the lack of technology, but more due to the conservative nature of the industry. This is the model for the field portion of that architecture.